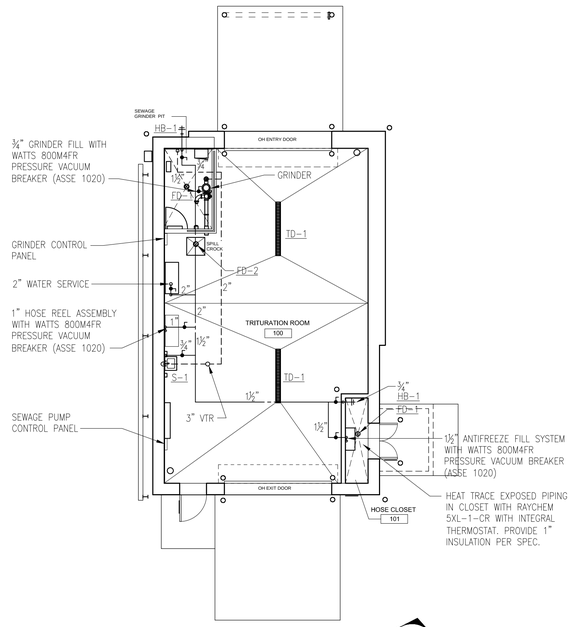

1 Floor Plan - Plumbing
Scale: 1/8" = 1' - 0"

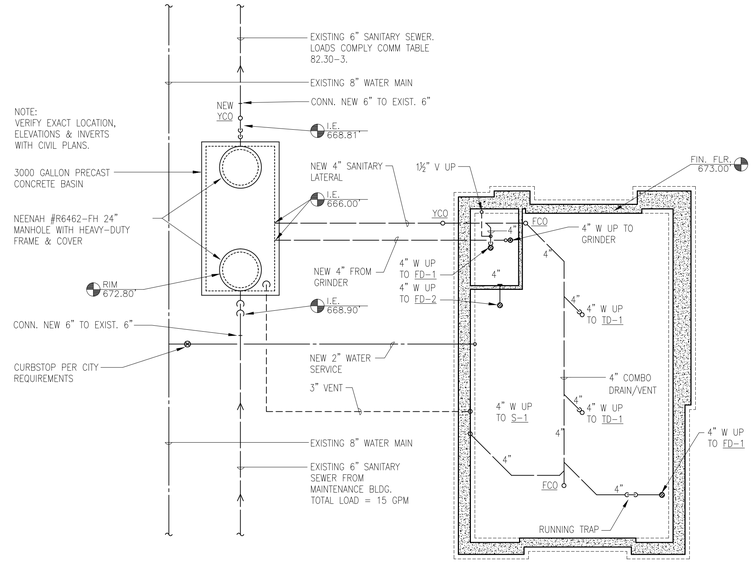

2 Underground - Plumbing
Scale: 1/8" = 1' - 0"

SYMBOL LIST

	CW	COLD WATER
	HW	HOT WATER
	HWR	HOT WATER RETURN
	V	VENT PIPING ABOVE GRADE
	W	WASTE/SOIL ABOVE GRADE
	W	WASTE/SOIL BELOW GRADE
	V	VENT PIPING BELOW GRADE
PD	PD	PUMPED DISCHARGE
		BALL VALVE
FCO / WCO	FCO/WCO	FLUSH CLEANOUT/WALL CLEANOUT
		PIPE UP OR RISE
		PIPE DOWN OR DROP
	WHA	WATER HAMMER ARRESTOR
		DIRECTION OF FLOW
	VTR	VENT THROUGH ROOF

WATER CALCULATIONS:

DEMAND: TOTAL GPM = 60
PRESSURE AT EXIST. 8" MAIN = 70 PSI
WATER SERVICE LOSS DUE TO FRICTION (40' OF 2") = 3.4 PSI
WATER SERVICE LOSS DUE TO ELEVATION = 0 PSI
PIPING TYPE: TYPE 'L' COPPER

DISTRIBUTION PIPE SIZING:
(B) BUILDING PRESS. AFTER CONTROL VALVE = 70-3.4 = 66.6 PSI
(C) WATER SERVICE LOSS DUE TO 2" METER = 7 PSI
(D) MINIMUM PRESS. @ FIXTURE = 20 PSI
(E) ELEVATION LOSS = (7 FT.)(.434) = 3 PSI
(F) LOSS DUE TO MISC. = 0 PSI
(G) EQUIV. FEET OF PIPE = 80 FT.
A = (B - C - D - E - F)(100) / G
A = (66.6 -7 -20 -3 -0)(100) / 80
A = 42 PSI PER 100 FT. UNIFORM LOSS

GENERAL NOTES:

1. GRINDER AND GRINDER CONTROL PANEL SHALL BE FURNISHED BY OWNER. REFER TO SPECIFICATION FOR PRODUCT INFORMATION AND INSTALLTION INSTRUCTIONS
2. REFER TO BID FORM AND SPECIFICATIONS SECTION 01230 FOR ALTERNATE BID INFORMATION

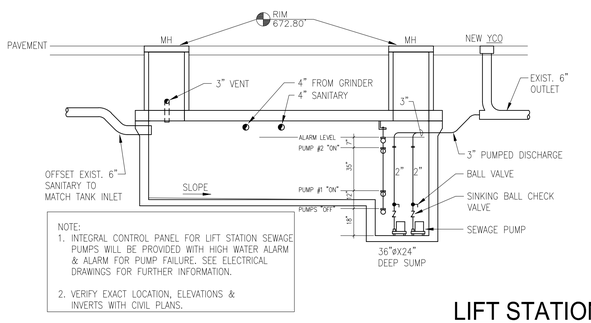

NOTE:
1. INTEGRAL CONTROL PANEL FOR LIFT STATION SEWAGE PUMPS WILL BE PROVIDED WITH HIGH WATER ALARM & ALARM FOR PUMP FAILURE. SEE ELECTRICAL DRAWINGS FOR FURTHER INFORMATION.
2. VERIFY EXACT LOCATION, ELEVATIONS & INVERTS WITH CIVIL PLANS.

LIFT STATION DESIGN:
LOAD FROM TRUCK DUMP = (5 DUMPS/HR)(200 GALLONS/DUMP) = 1000 GPH
1000 GPH = 17 GPM EQUALIZED FLOW
EXIST. LOAD FROM MAINT. BLDG. = 15 GPM
LOAD FROM NEW BLDG. = 12 GPM (NOT INCLUDING EXTERIOR FIXTURES)
TOTAL LOAD = 44 GPM

PUMPS: DUPLEX SEWAGE PUMPS RATED FOR 44 GPM @ 10' HEAD EACH. ADJUST BALL VALVES ON DISCHARGE SO AS NOT TO EXCEED 44 GPM.

BASIN: CREST PRECAST 3000H, 3000 GALLON, 71.6 GALLON PER INCH STORAGE. BASIN CONSTRUCTION SHALL BE RATED FOR TRUCK TRAFFIC & BUOYANCY LOADS.

FLOATS:
RESERVE ZONE = (88 GPM)(5 MIN.)/71.6 = 6.15" (USE 7")
MIN. PUMP RUN TIME = (44 GPM)(0.33 MIN.)/71.6 = 0.2" (USE 6")

LIFT STATION DETAIL

SCALE: NONE

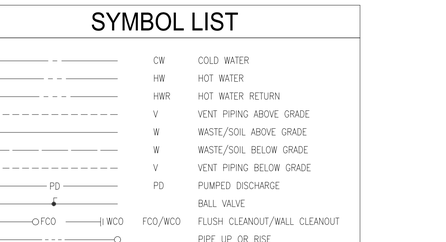

GRINDER PIPING DIAGRAM

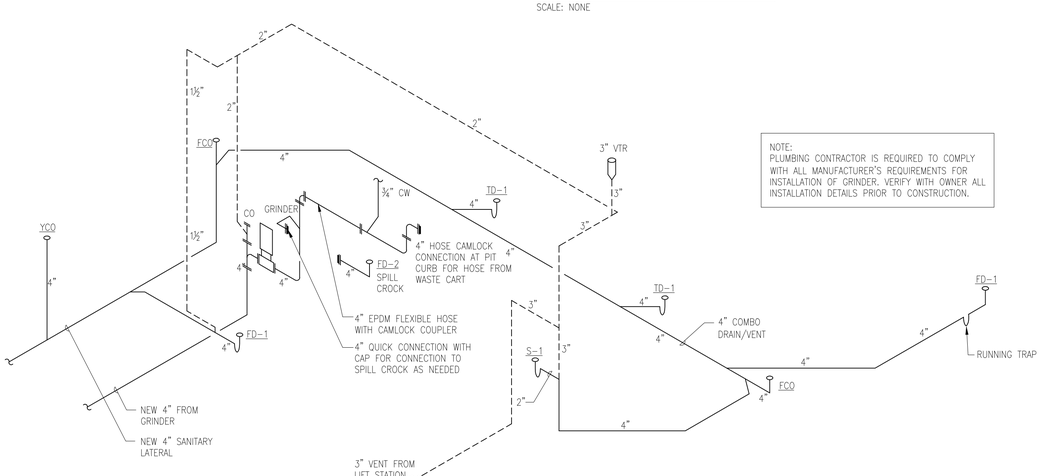

NOTE:
PLUMBING CONTRACTOR IS REQUIRED TO COMPLY WITH ALL MANUFACTURER'S REQUIREMENTS FOR INSTALLATION OF GRINDER. VERIFY WITH OWNER ALL INSTALLATION DETAILS PRIOR TO CONSTRUCTION.

WASTE & VENT ISOMETRIC

SCALE: NONE

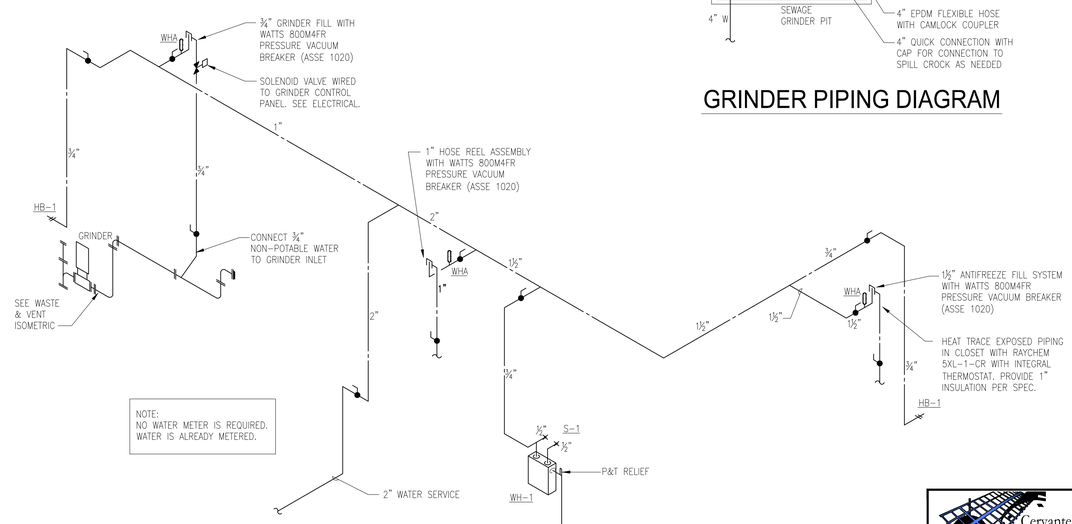

NOTE:
NO WATER METER IS REQUIRED. WATER IS ALREADY METERED.

WATER ISOMETRIC

SCALE: NONE

Cervantes Consulting Engineers, LLC
3740 W Southland Drive Milwaukee Wisconsin 53132
Phone: 414 761-5502 - Fax: 414 761-0183
Project No. 09-02102

General Mitchell International Airport
GMIA - Trituration Building
5300 South Howell Avenue Milwaukee, WI. 53207

MILWAUKEE COUNTY DEPARTMENT OF TRANSPORTATION AND PUBLIC WORKS
CITY CAMPUS 2711 W. WELLS ST. - 2ND FLOOR MILWAUKEE, WI 53208

REVISIONS:

DATE: 6-30-2010
PROJECT NO: A104 - 08454
SITE NO: 290
BUILDING NO: 252

P-1