NRCA University

F.J.A. CHRISTIANSEN ROOFING CO., INC.
A TECTAAMERICA COMPANY

Rooftop Photovoltaics: Maintaining your Roof's Integrity

Donald R. Walter
Environmental Solutions Manager
FJA Christiansen Roofing Co., Inc. – A Tecta America Company

TECTAAMERICA™ CORP

NRCA University

F.J.A. CHRISTIANSEN ROOFING CO., INC.
A TECTAAMERICA COMPANY

NRCA Guidelines for Roof-mounted Photovoltaic System Installations

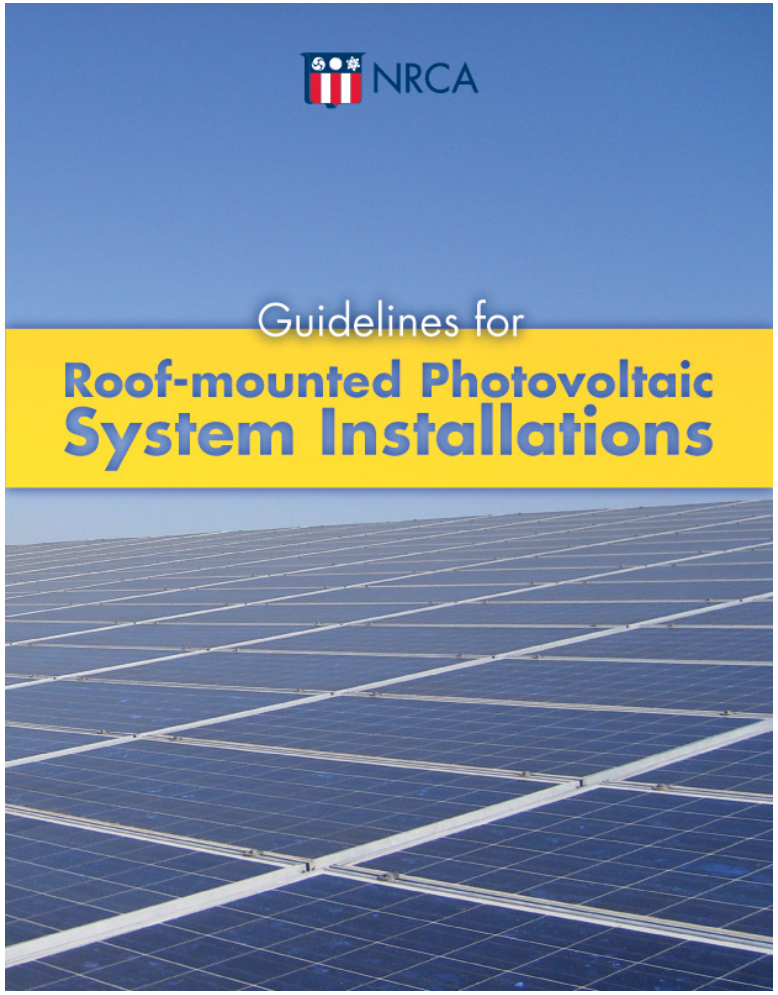

NRCA University

F.J.A. CHRISTIANSEN ROOFING CO., INC.
A TECTAAMERICA COMPANY

NRCA Building Owners Guide to Roof-mounted Photovoltaic Systems

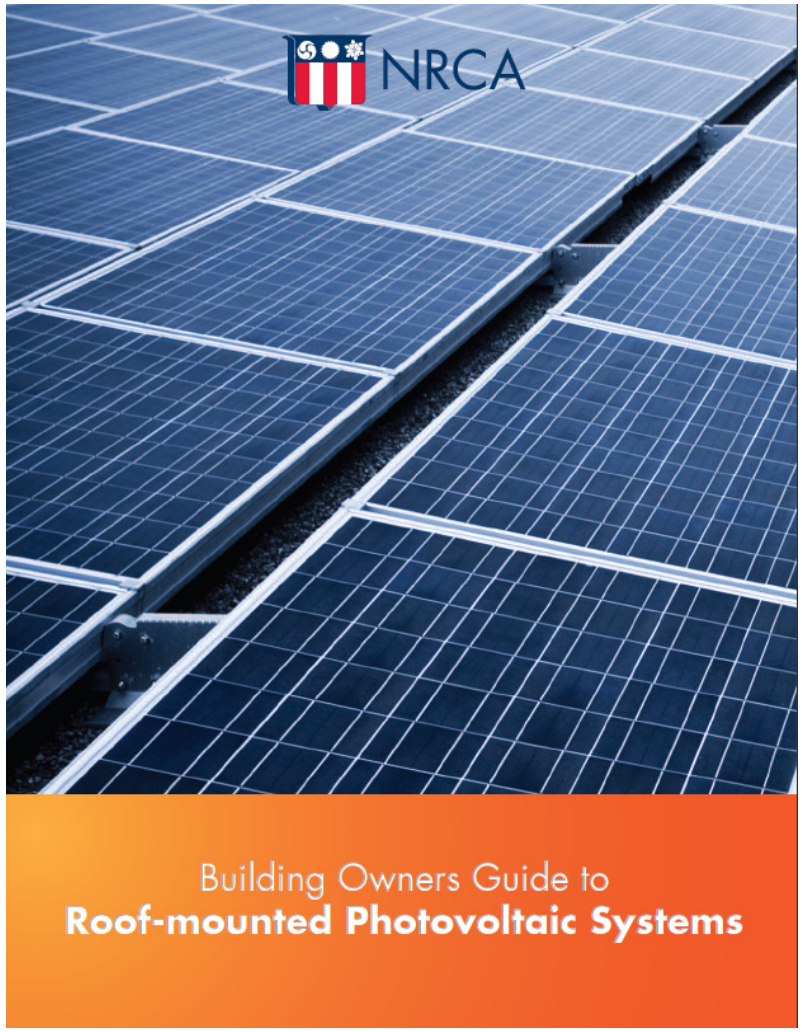

Roof Considerations

- Load
- Site orientation (shade)
- Equivalent service life
- Drainage
- Warranties

Equivalent Service Life

- A PV system and a roof system should have equivalent service life.
  - A new roof is often not included in payback estimates for a rooftop PV system.
- It is a common assumption that a less-than-10-year-old roof is acceptable for a PV installation when the payback is determined to be less than 10 years.
- There's more than one way to estimate payback.

A roof system's primary function is to provide for watertightness…

However, the roof is also a platform for:

- Water tanks
- HVAC equipment
- Antennas
- Electrical equipment
- Plaza decks/vegetation
- PV installations

NRCA University

F.J.A. CHRISTIANSEN ROOFING CO., INC.

A TECTAAMERICA COMPANY

NRCA University

F.J.A. CHRISTIANSEN ROOFING CO., INC.

A TECTAAMERICA COMPANY

NRCA University

F.J.A. CHRISTIANSEN ROOFING CO., INC.

A TECTAAMERICA COMPANY

NRCA University

F.J.A. CHRISTIANSEN ROOFING CO., INC.

A TECTAAMERICA COMPANY

NRCA University

F.J.A. CHRISTIANSEN ROOFING CO., INC.

A TECTAAMERICA COMPANY

NRCA University

F.J.A. CHRISTIANSEN ROOFING CO., INC.

A TECTAAMERICA COMPANY

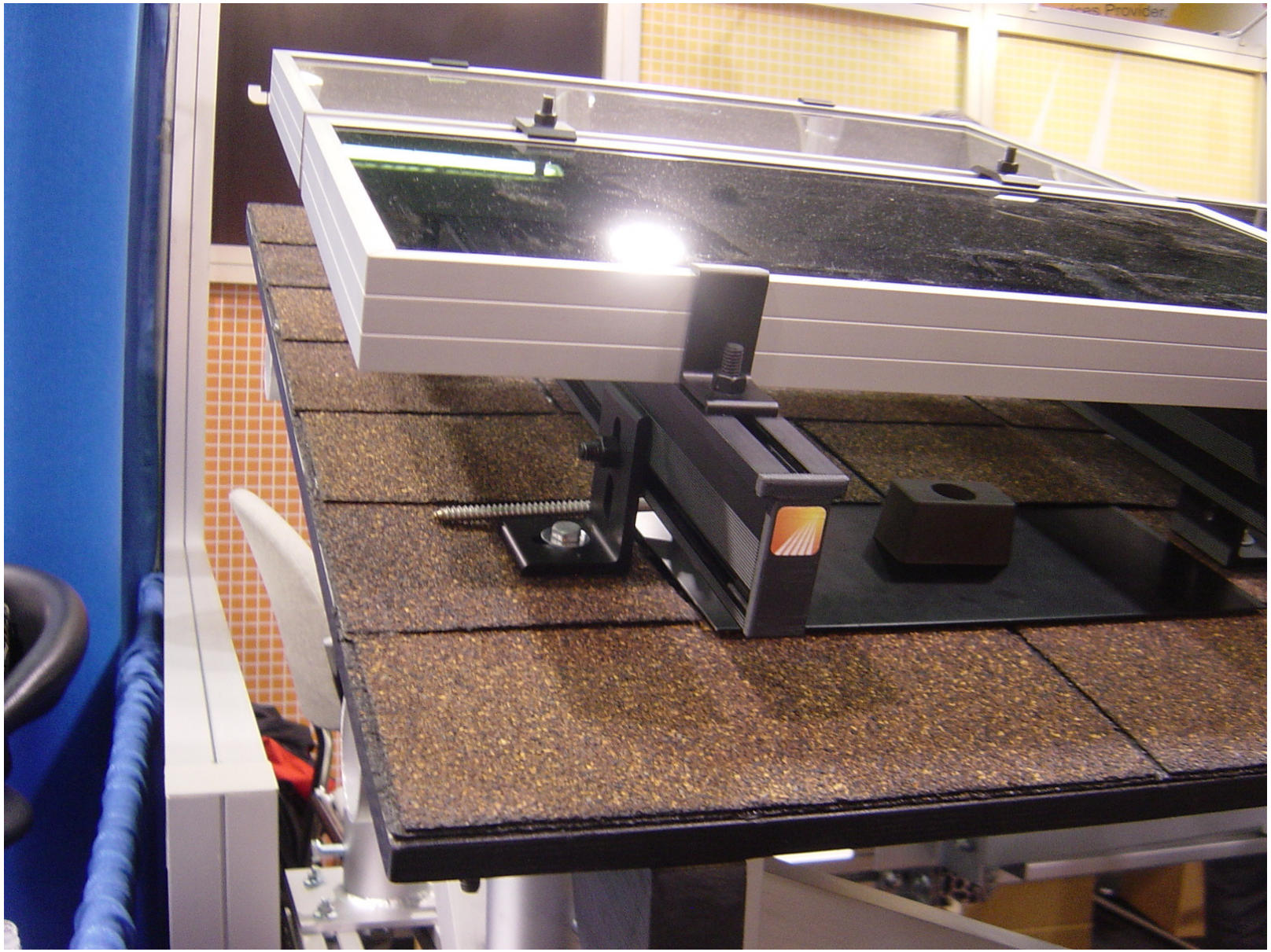

NRCA University

F.J.A. CHRISTIANSEN ROOFING CO., INC.
A TECTAAMERICA COMPANY

Shingle concept

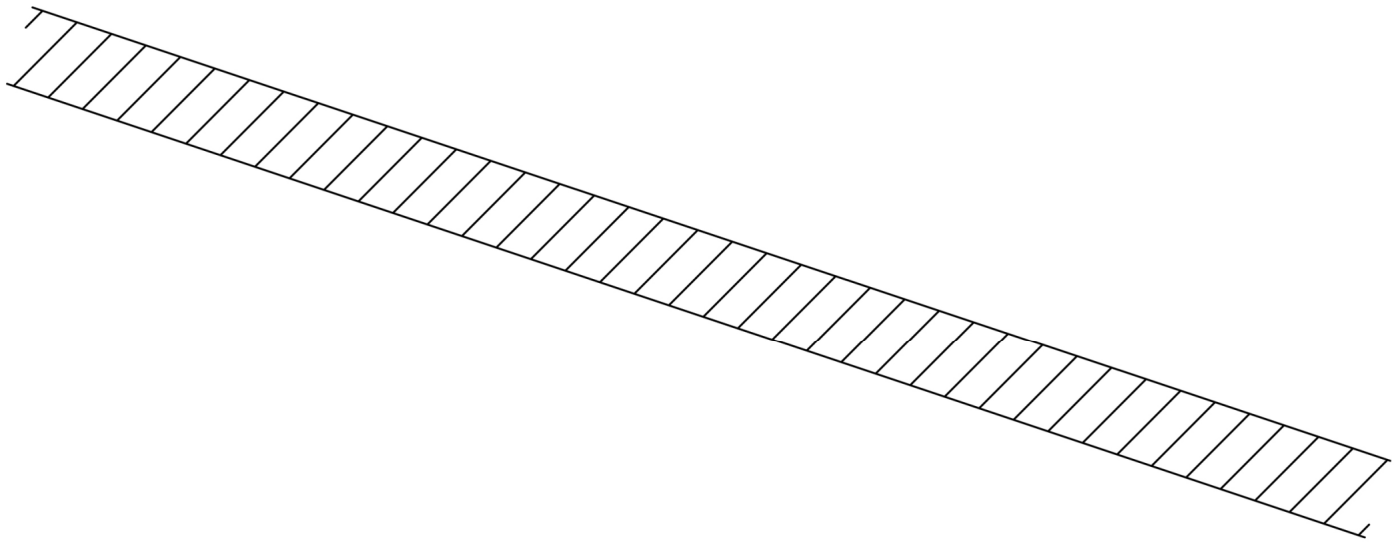

NRCA University

F.J.A. CHRISTIANSEN ROOFING CO., INC.
A TECTAAMERICA COMPANY

Shingle concept

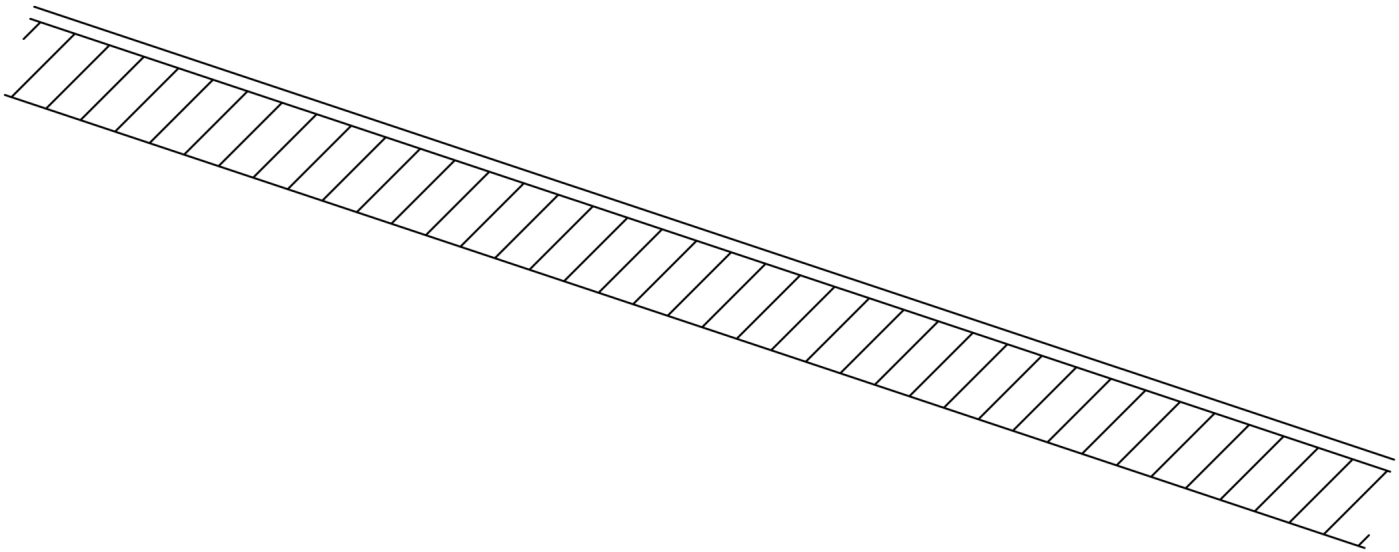

NRCA University

F.J.A. CHRISTIANSEN ROOFING CO., INC.
A TECTAAMERICA COMPANY

Shingle concept

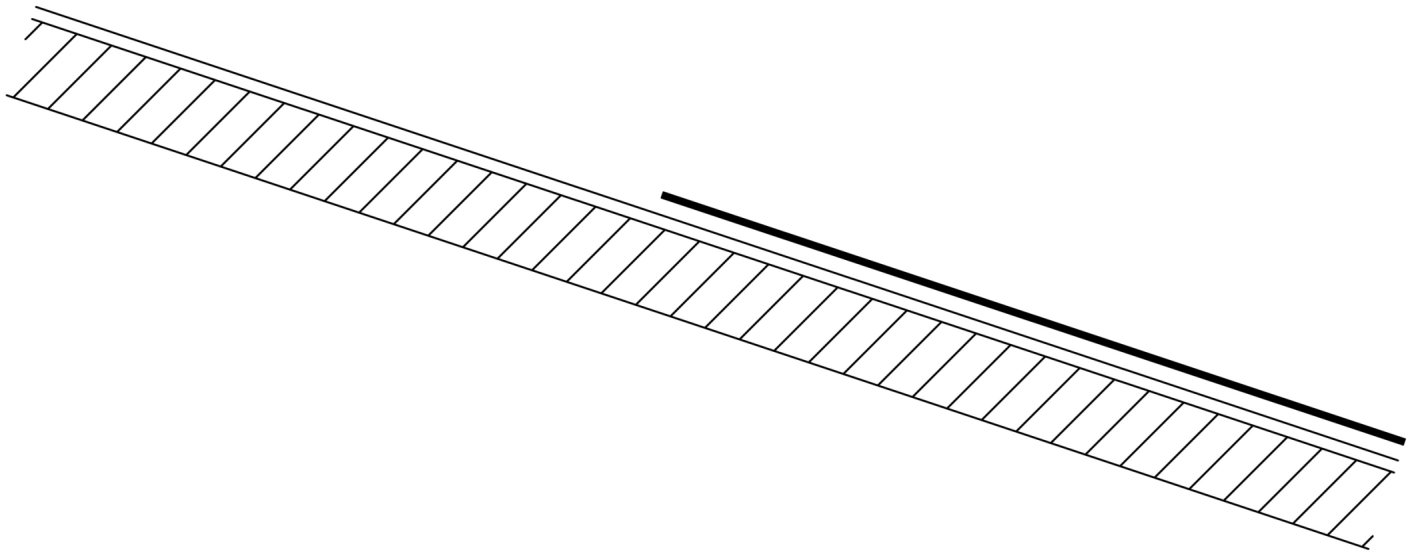

NRCA University

F.J.A. CHRISTIANSEN ROOFING CO., INC.
A TECTAAMERICA COMPANY

Shingle concept

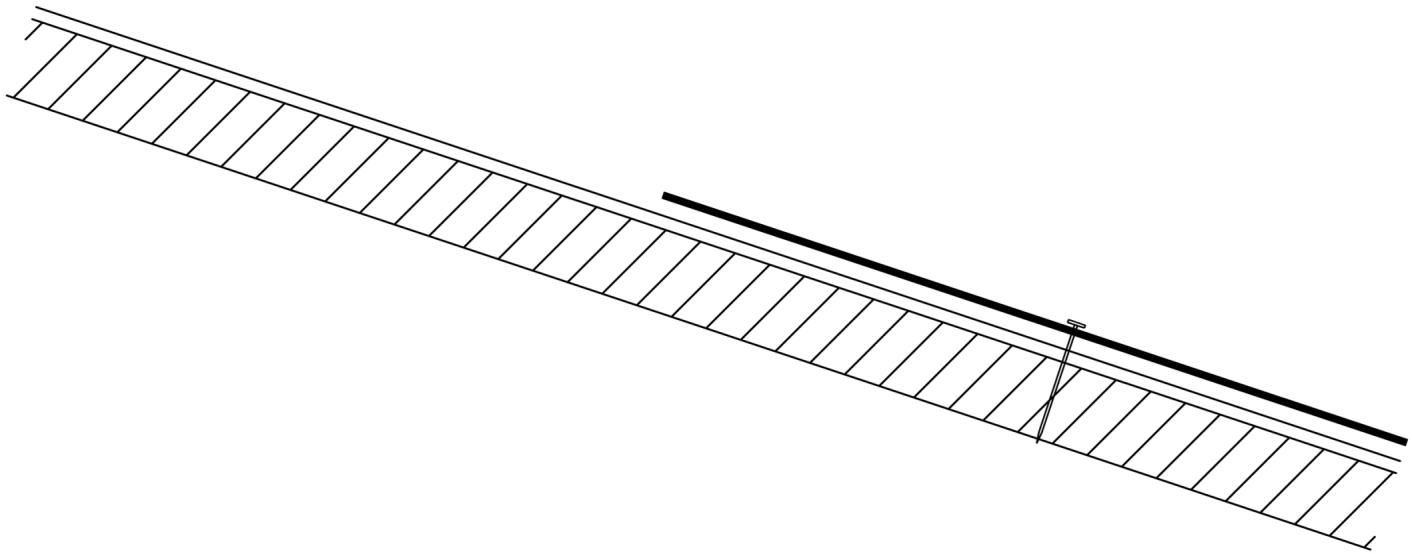

NRCA University

F.J.A. CHRISTIANSEN ROOFING CO., INC.
A TECTAAMERICA COMPANY

Shingle concept

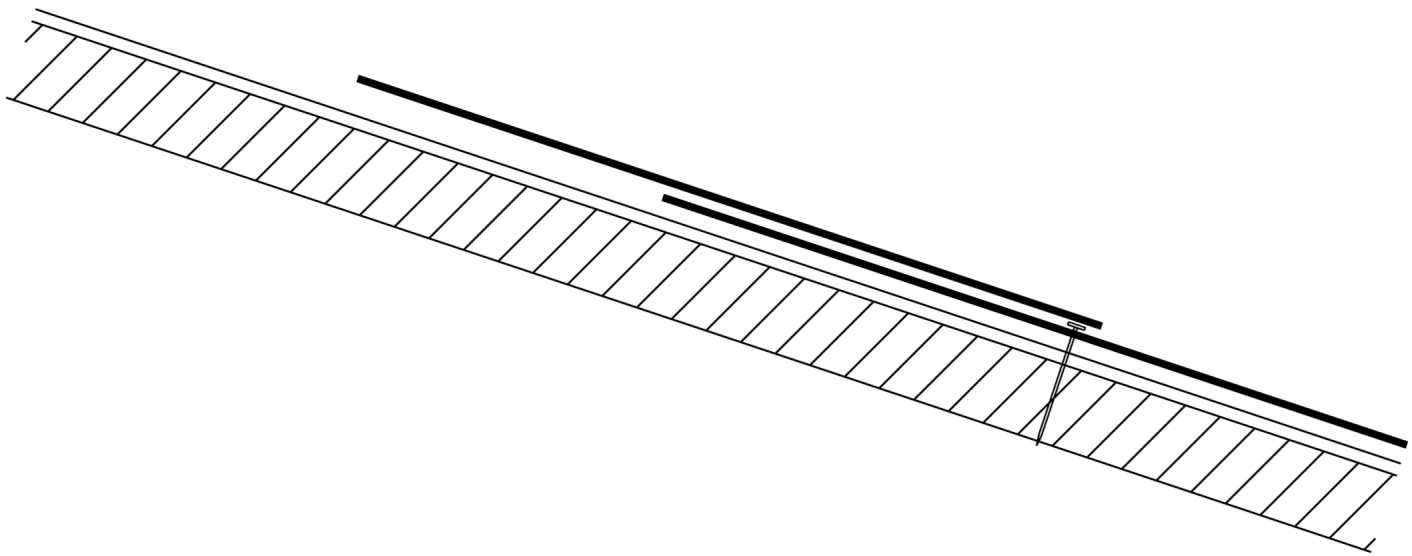

NRCA University

F.J.A. CHRISTIANSEN ROOFING CO., INC.
A TECTAAMERICA COMPANY

Shingle concept

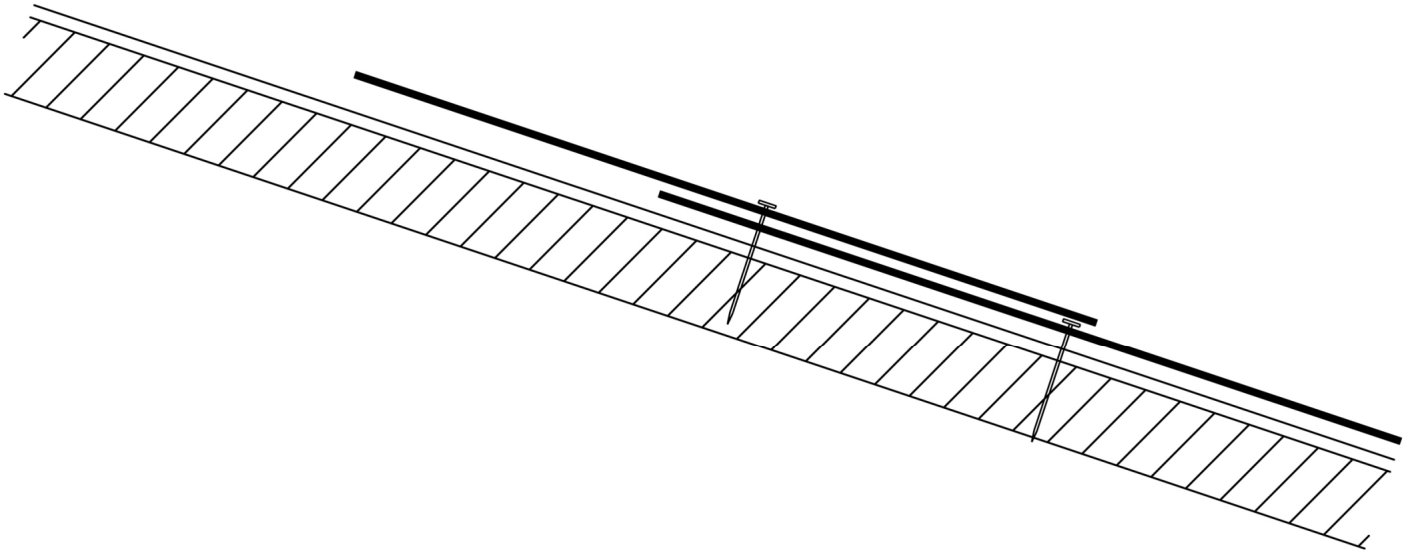

NRCA University

F.J.A. CHRISTIANSEN ROOFING CO., INC.
A TECTAAMERICA COMPANY

Shingle concept

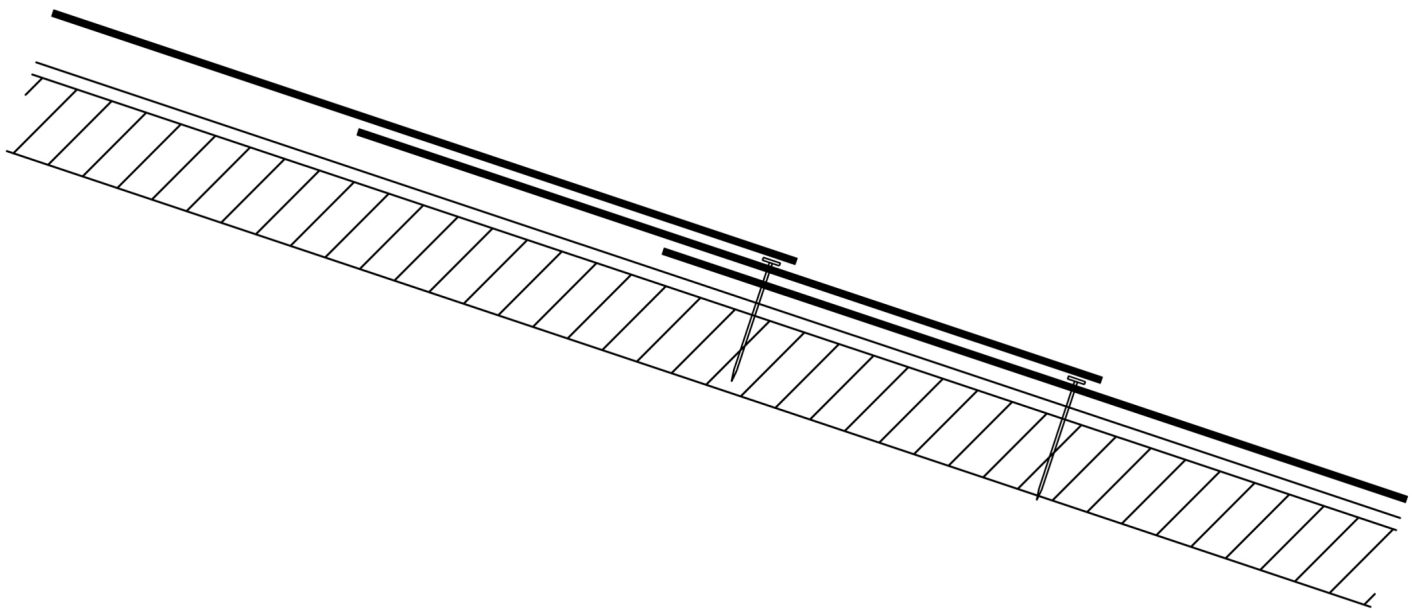

NRCA University

F.J.A. CHRISTIANSEN ROOFING CO., INC.
A TECTAAMERICA COMPANY

Shingle concept

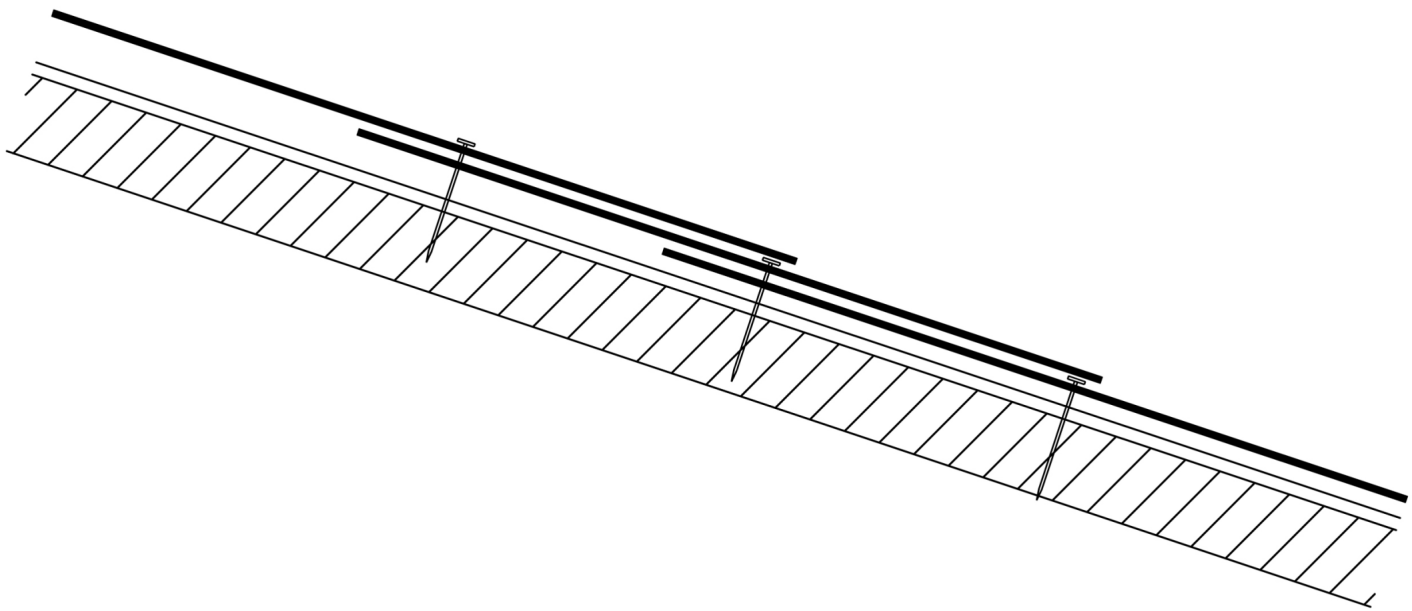

NRCA University

F.J.A. CHRISTIANSEN ROOFING CO., INC.
A TECTAAMERICA COMPANY

Shingle concept

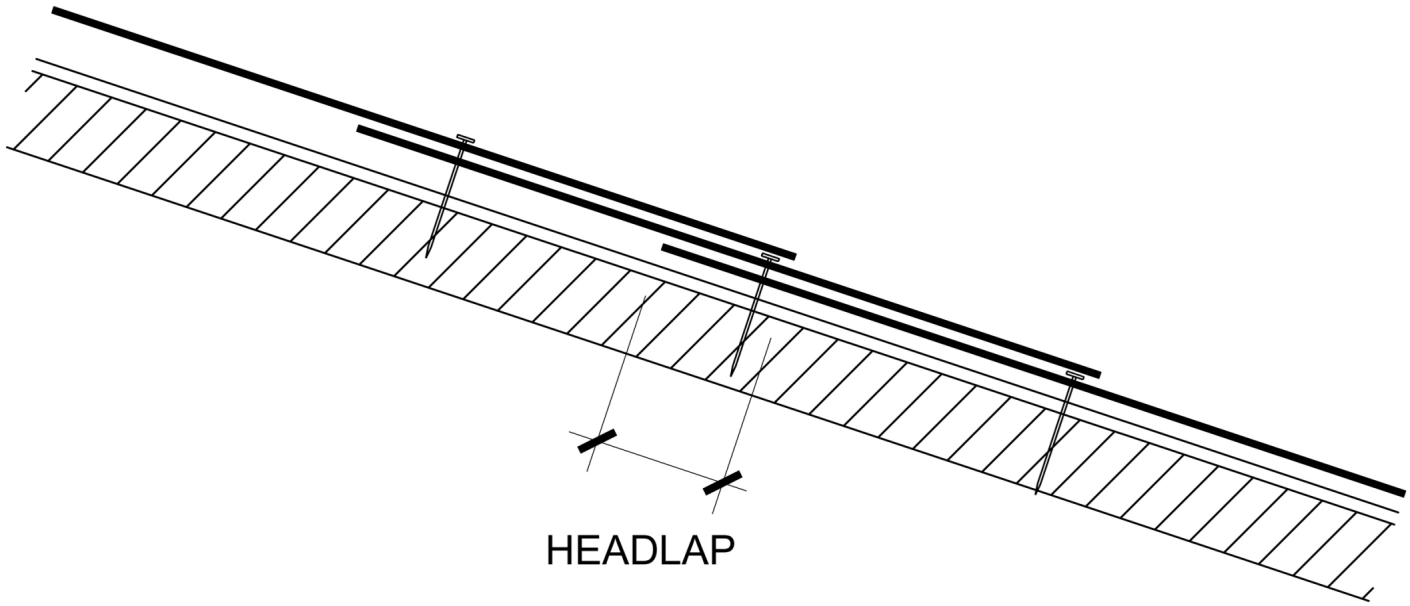

NRCA University

F.J.A. CHRISTIANSEN ROOFING CO., INC.
A TECTAAMERICA COMPANY

Shingle concept

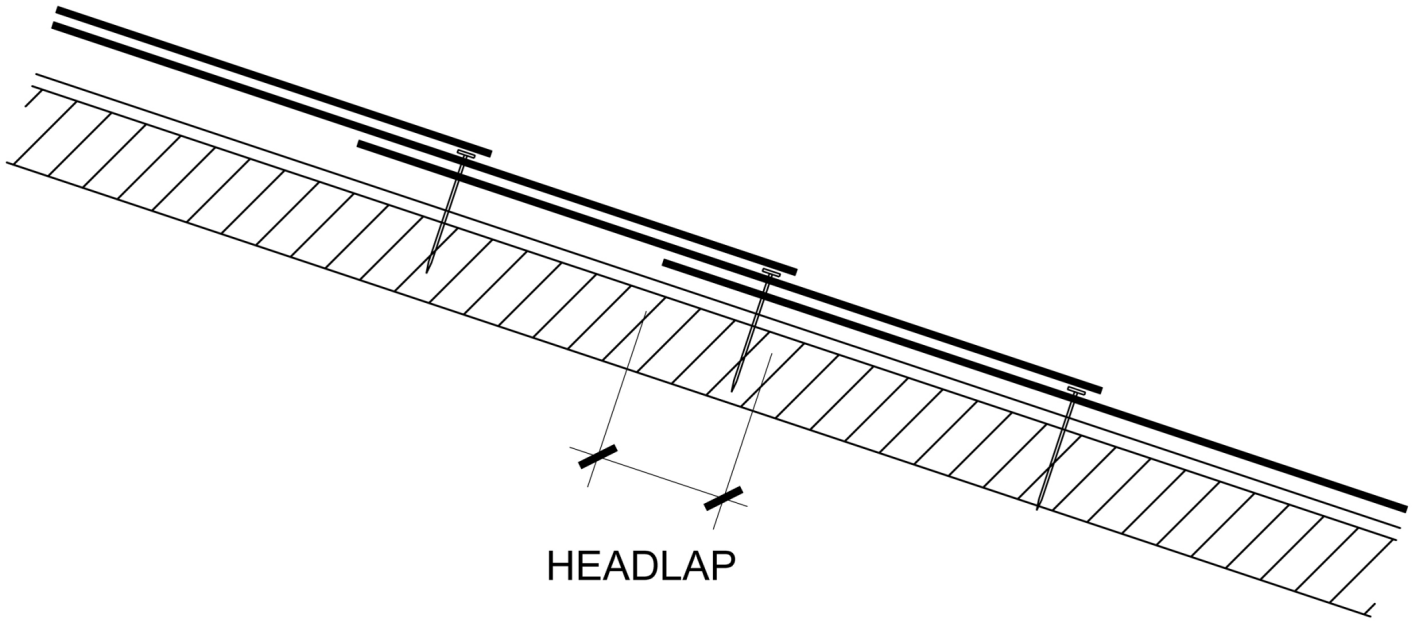

NRCA University

F.J.A. CHRISTIANSEN ROOFING CO., INC.

A TECTAAMERICA COMPANY

NRCA University

F.J.A. CHRISTIANSEN ROOFING CO., INC.

A TECTAAMERICA COMPANY

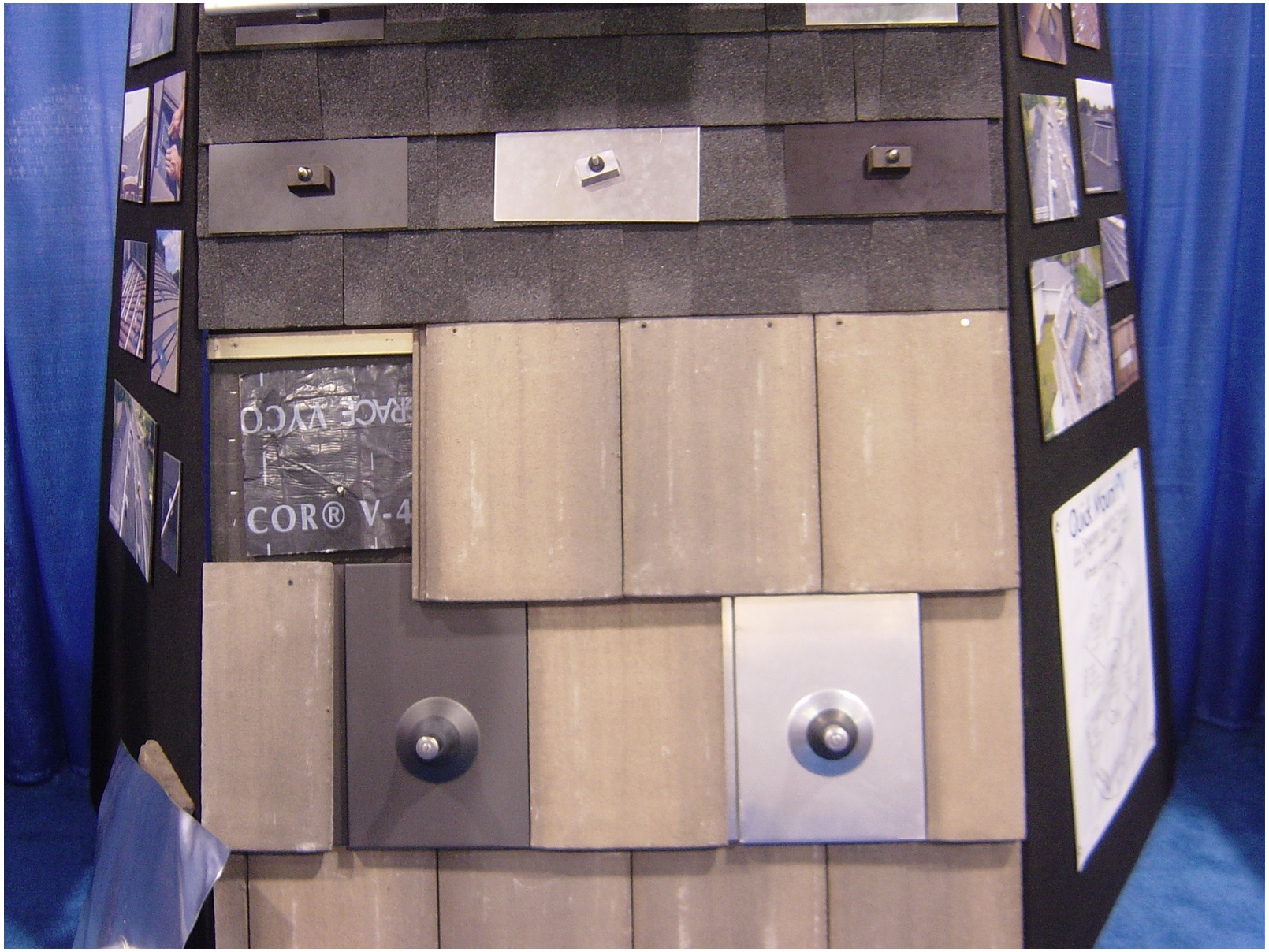

NRCA University

F.J.A. CHRISTIANSEN ROOFING CO., INC.

A TECTAAMERICA COMPANY

NRCA University

F.J.A. CHRISTIANSEN ROOFING CO., INC.
A TECTAAMERICA COMPANY

ASTM INTERNATIONAL Designation: WK21327 *(For Task Group Use Only – Not an Approved Standard)*

ENGLISH

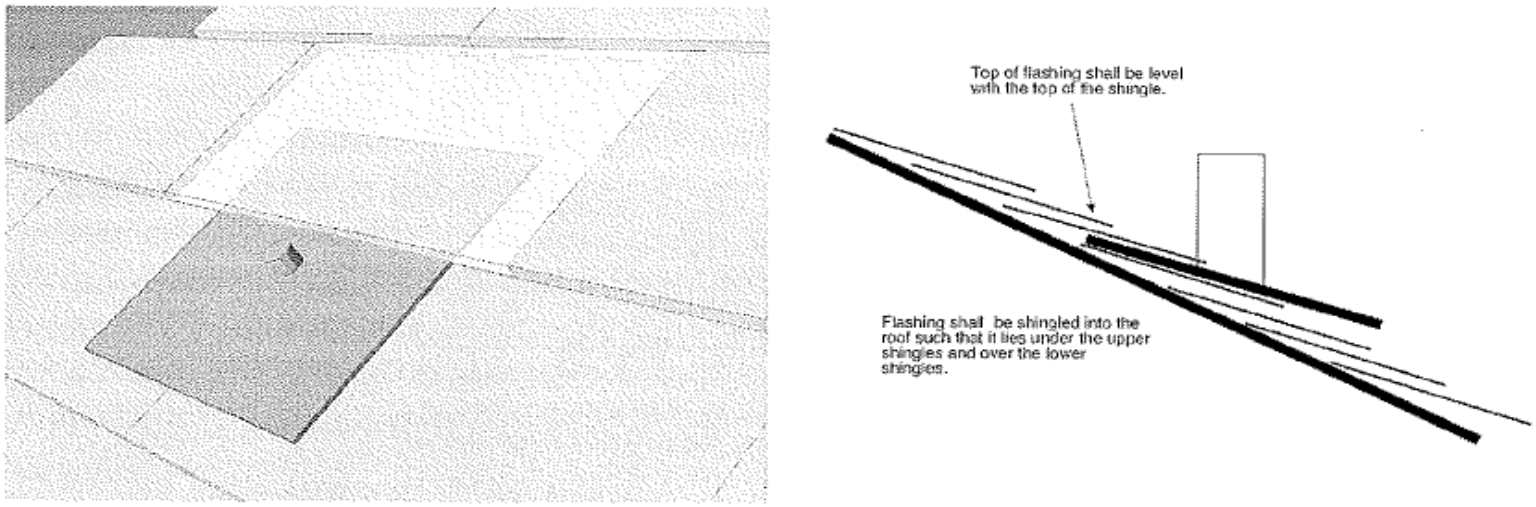

Figure 1 – Example of flashing integration with asphalt shingle roof system, top view (left) and side view (right)

(ASTM E44.09 Photovoltaic Electric Power Conversion)

NRCA University

F.J.A. CHRISTIANSEN ROOFING CO., INC.
A TECTAAMERICA COMPANY

Support Flashing

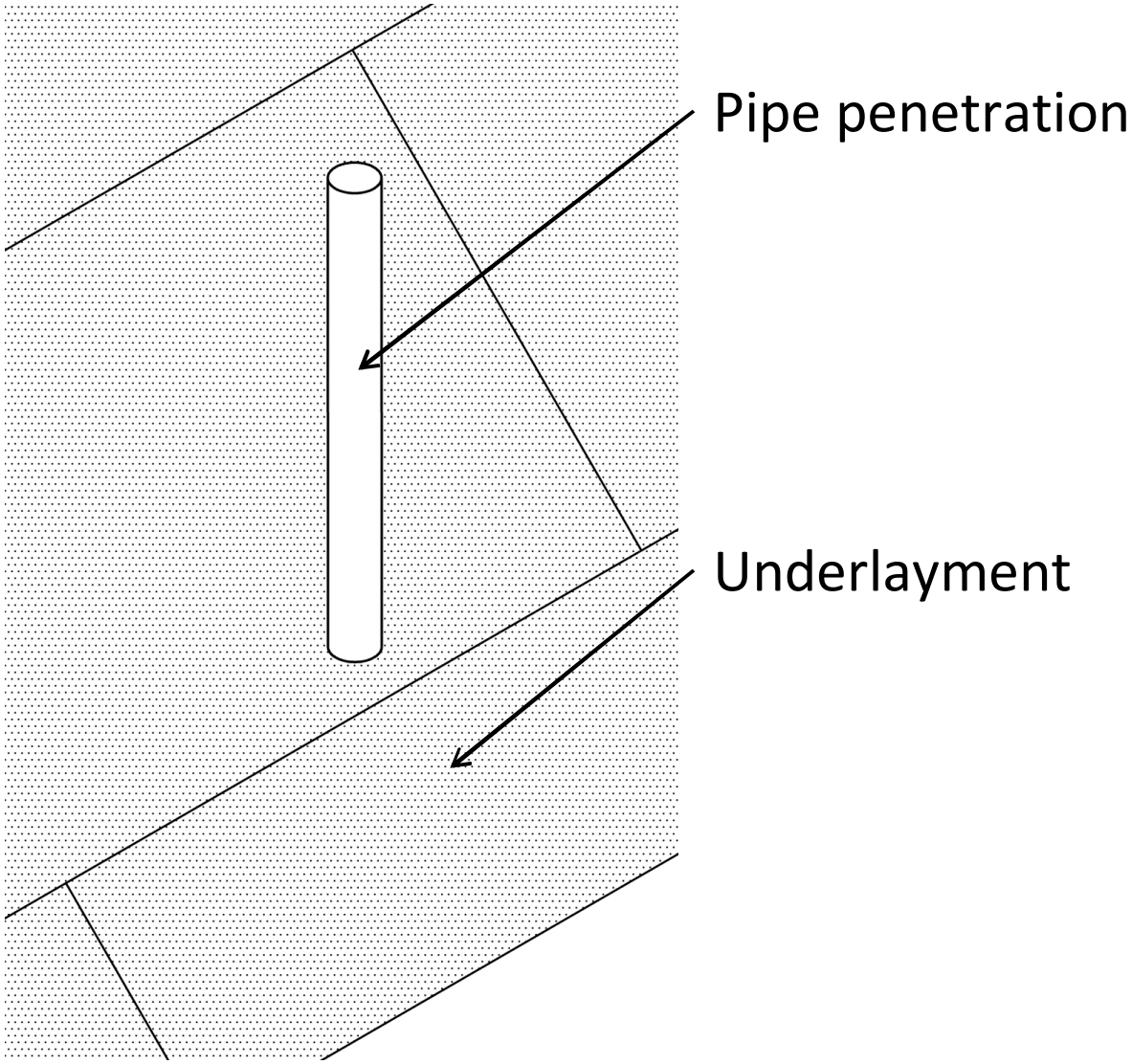

NRCA University

F.J.A. CHRISTIANSEN ROOFING CO., INC.
A TECTAAMERICA COMPANY

Support Flashing

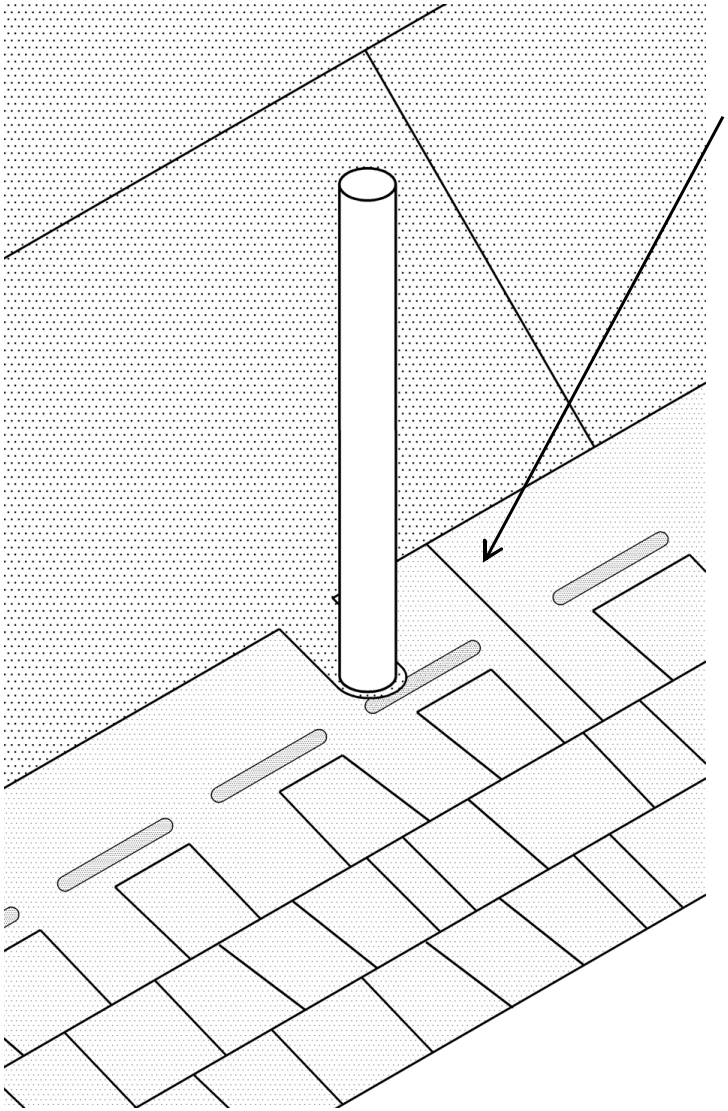

NRCA University

F.J.A. CHRISTIANSEN ROOFING CO., INC.
A TECTAAMERICA COMPANY

Support Flashing

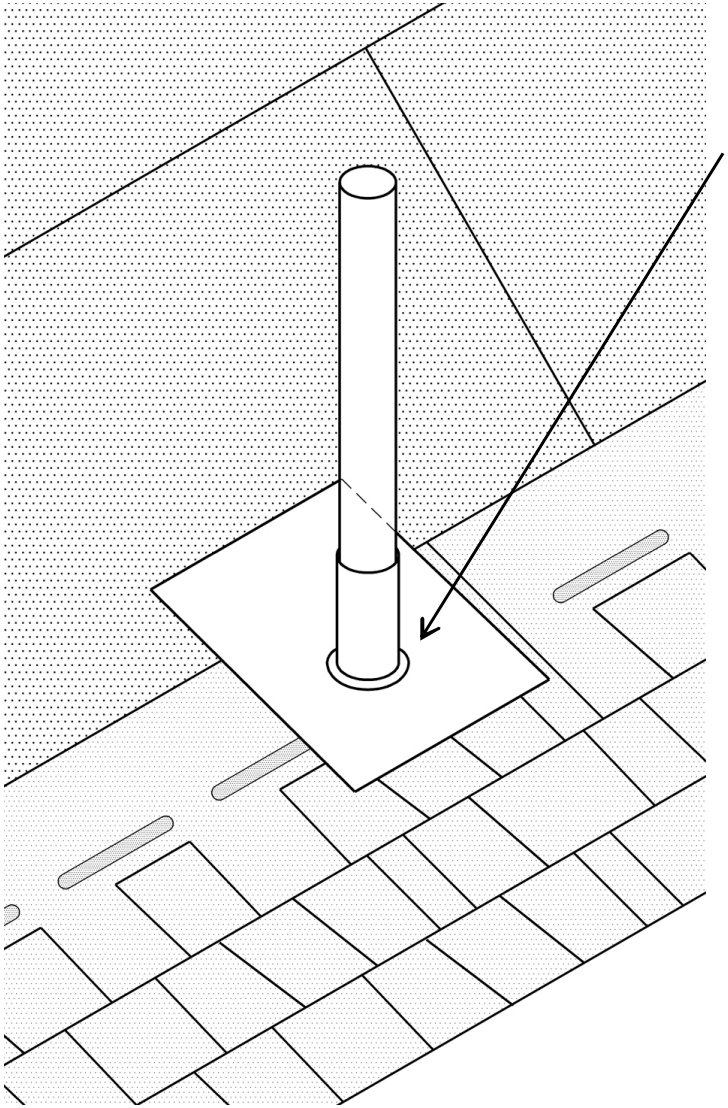

Sheet metal collar

NRCA University

F.J.A. CHRISTIANSEN ROOFING CO., INC.
A TECTAAMERICA COMPANY

Support Flashing

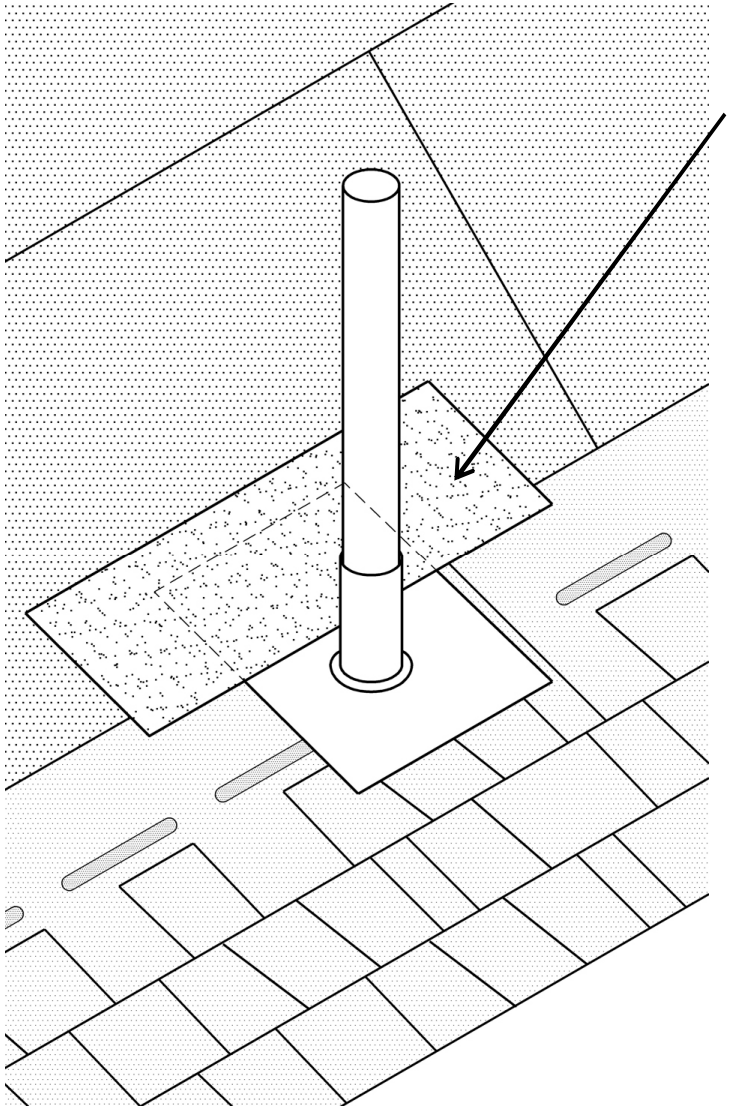

NRCA University

F.J.A. CHRISTIANSEN ROOFING CO., INC.
A TECTAAMERICA COMPANY

Support Flashing

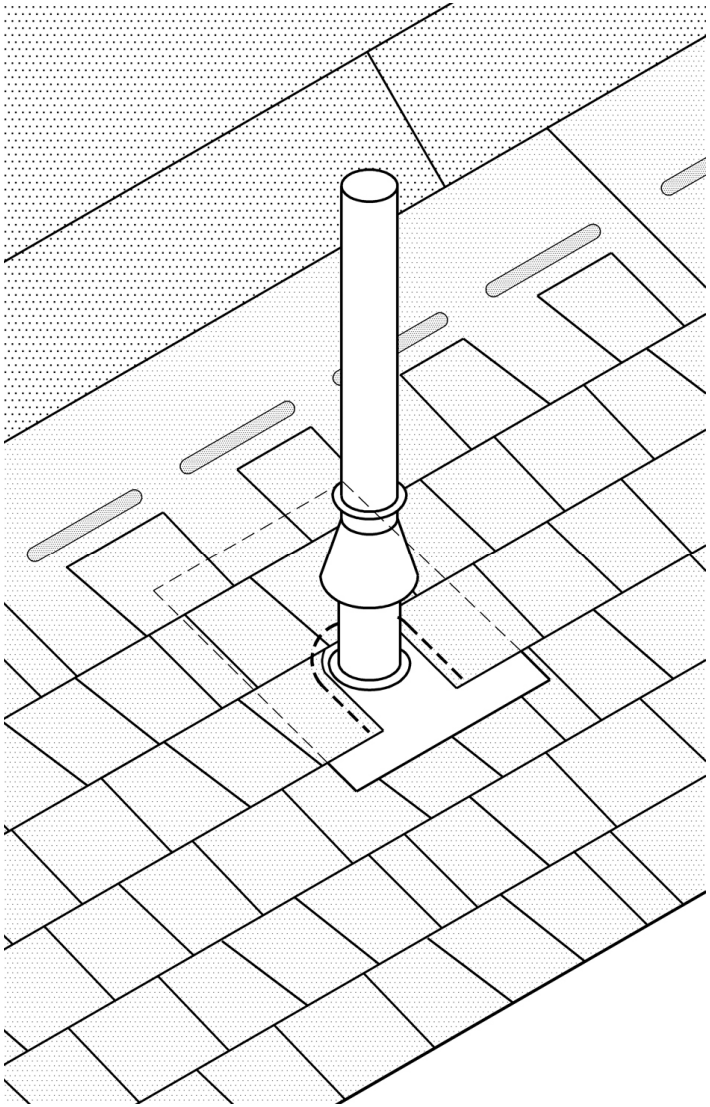

NRCA guidelines

- New roof system is best
- Existing roof only if designed for PV
  - Equivalent service life
  - PVs will likely affect rate of aging
  - Additional penetrations
  - Additional rooftop traffic
  - Roof surface temperatures
- Design loads and drainage

NRCA guidelines -- cont.

Low-slope roof system enhancements:

- High-compressive strength rigid board insulation
- Thermal barrier board directly under membrane
- Membranes with increased puncture resistance/thickness

NRCA guidelines -- cont.

Steep-slope roof systems:

- Highly heat-resistant roof materials, including underlayment
- Adequate clearance for ventilation under PV modules
- Reinforced walkways for rooftop traffic

Summary

- Primary function is watertightness
- Life expectancy
- Shingle concept
- NRCA guidelines
  - New roof system is best
  - Roof system enhancements
  - Roof penetrations

NRCA University

F.J.A. CHRISTIANSEN ROOFING CO., INC.
A TECTAAMERICA COMPANY

Thank You!

Questions?

Donald R. Walter
Environmental Solutions Manager
FJA Christiansen Roofing Co., Inc.
2101 Purdue St.
Milwaukee, WI 5309

(414) 445-4141
FAX: (414) 49-4748
dwalter@christiansenroofing.com